CS 466
Introduction to Bioinformatics
Lecture 16

Mohammed El-Kebir

October ~~18~~ 21, ~~2019~~ 20

Outline

- Character-based phylogeny (small)
- Application of small phylogeny maximum parsimony problem to cancer

Reading:

- Chapters 10.2, 10.5-10.8, 10.9 in Jones and Pevzner

Character-Based Tree Reconstruction

- Characters may be morphological features
  - Shape of beak {generalist, insect catching, ...}
  - Number of legs {2,3,4, ..}
  - Hibernation {yes, no}

n species

→ set of characters

- Character may be nucleotides/amino acids
  - {A, T, C, G}
  - 20 amino acids

species → characters → states

- Values of a character are called states
  - We assume discrete states

↳ finite

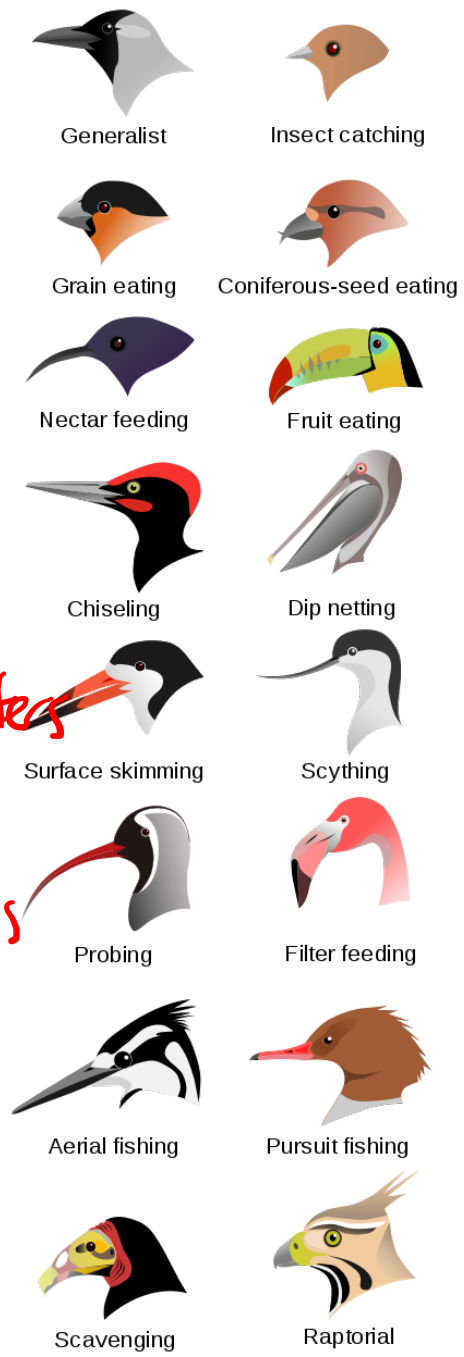

Character-Based Phylogeny Reconstruction

Input characters → Output optimal tree

Question: What is optimal?

Want: Optimization criterion

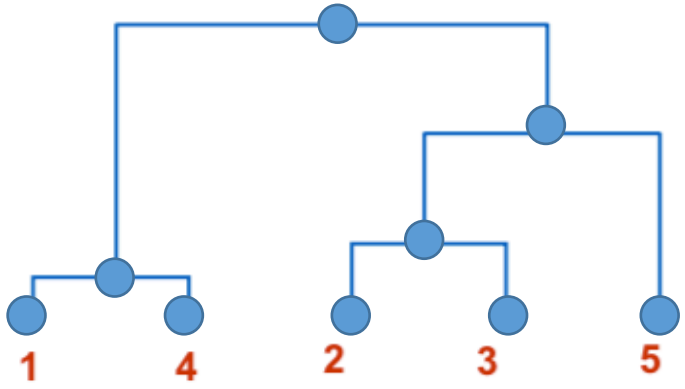

Character-Based Phylogeny Reconstruction

Input characters → Output optimal tree

Question: What is optimal?

Want: Optimization criterion

Question: How to optimize this criterion?

Want: Algorithm

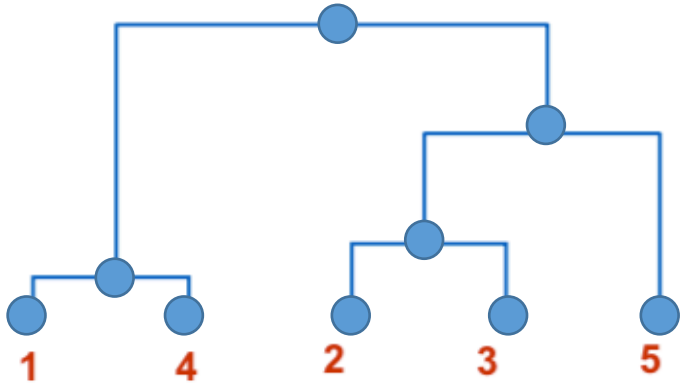

Character-Based Phylogeny Reconstruction: Input

char

Characters / states	State 1	State 2
Mouth	Smile S	Frown F
Eyebrows	Normal N	Pointed P

input :

S N F N F P F P

n = 4 leaves

Character-Based Phylogeny Reconstruction: Criterion

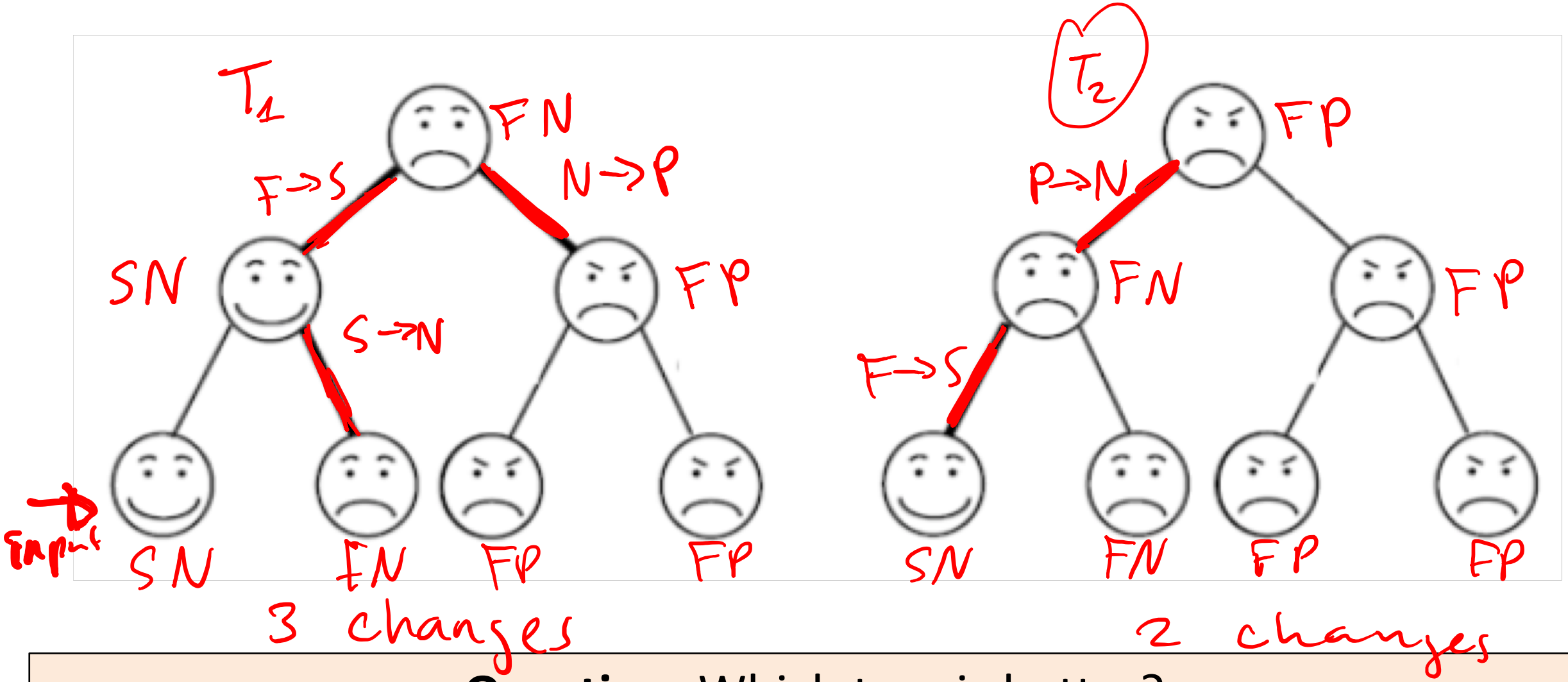

Question: Which tree is better?

Character-Based Phylogeny Reconstruction: Criterion

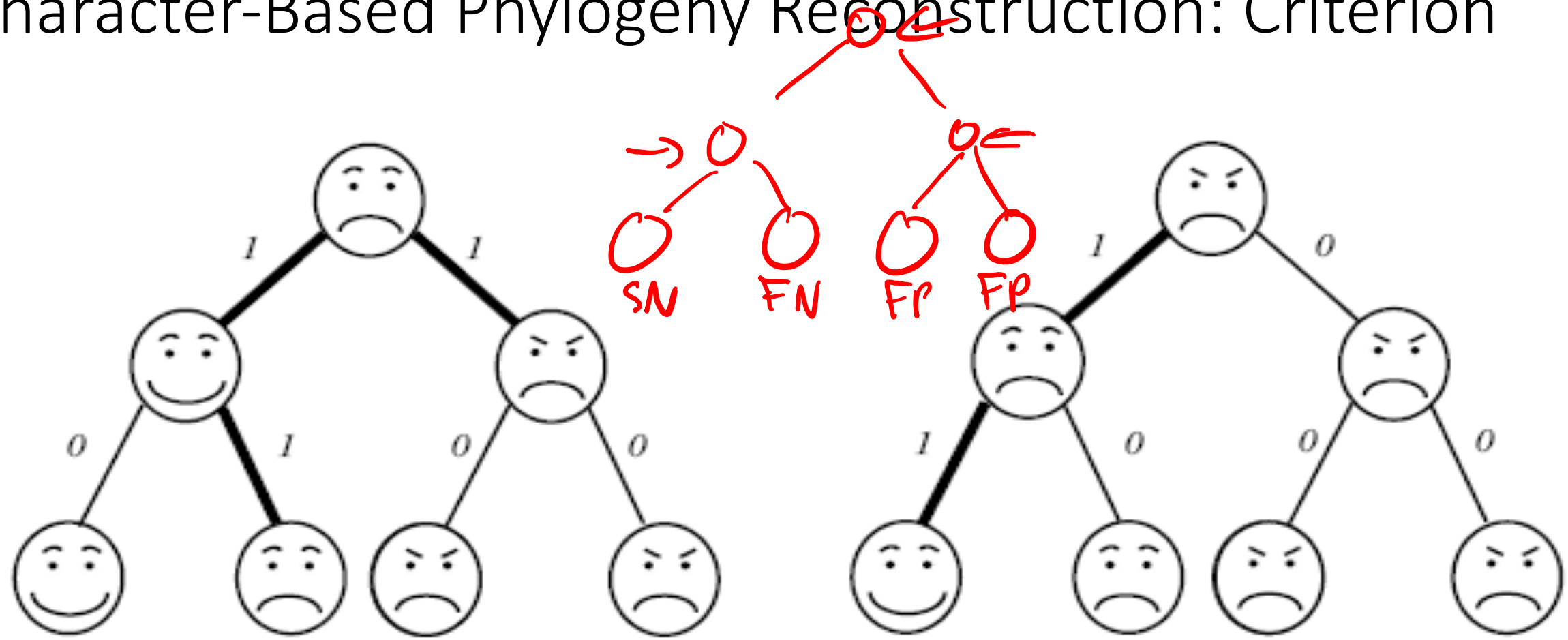

(a) *Parsimony Score=3*

(b) *Parsimony Score=2*

Parsimony: minimize number of changes on edges of tree

Why Parsimony?

- Ockham's razor: "simplest" explanation for data
- Assumes that observed character differences resulted from the fewest possible mutations
- Seeks tree with the lowest **parsimony score**, i.e. the sum of all (costs of) mutations in the tree.

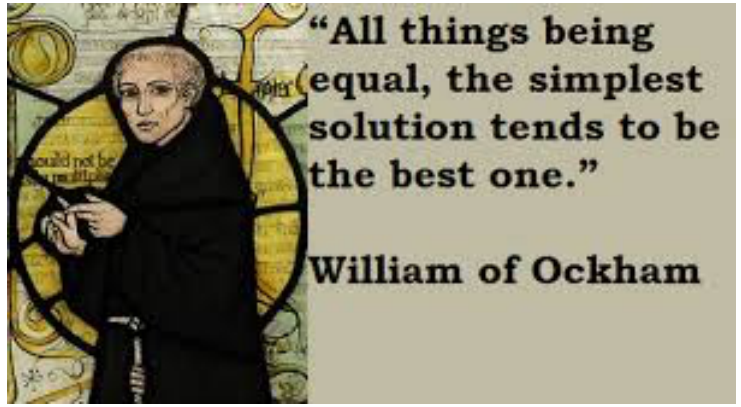

Again, a Small and a Large Problem

A: character-state matrix

Small Maximum Parsimony Phylogeny Problem:

Given $m \times n$ matrix $A = [a_{i,j}]$ and tree T with m leaves, find assignment of character states to each internal vertex of T with minimum parsimony score.

species characters

easy

Large Maximum Parsimony Phylogeny Problem:

Given $m \times n$ matrix $A = [a_{i,j}]$, find a tree T with m leaves labeled according to A and an assignment of character states to each internal vertex of T with minimum parsimony score.

NP-hard

Question: Are both problems easy (i.e. in P)?

Again, a Small and a Large Problem

Small Maximum Parsimony Phylogeny Problem:
Given $m \times n$ matrix $A = [a_{i,j}]$ and tree T with m leaves, find assignment of character states to each internal vertex of T with minimum parsimony score.

Large Maximum Parsimony Phylogeny Problem:
Given $m \times n$ matrix $A = [a_{i,j}]$, find a tree T with m leaves labeled according to A and an assignment of character states to each internal vertex of T with minimum parsimony score.

Question: Are both problems easy (i.e. in P)?

Small Maximum Parsimony Phylogeny Problem

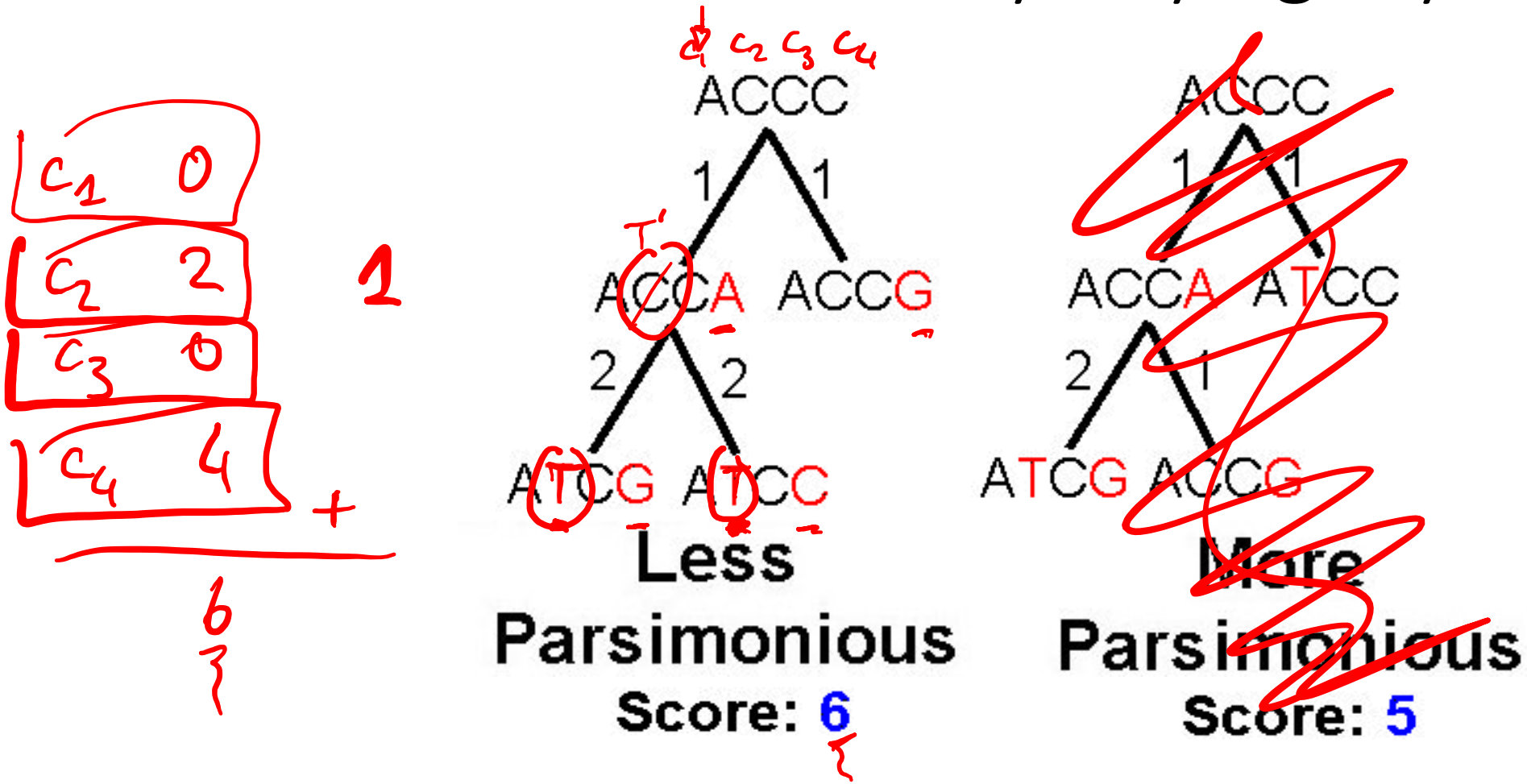

Question: There are $n = 4$ characters in the $m = 2$ taxa (leaves). Can we solve each character separately?

Small Maximum Parsimony Phylogeny Problem

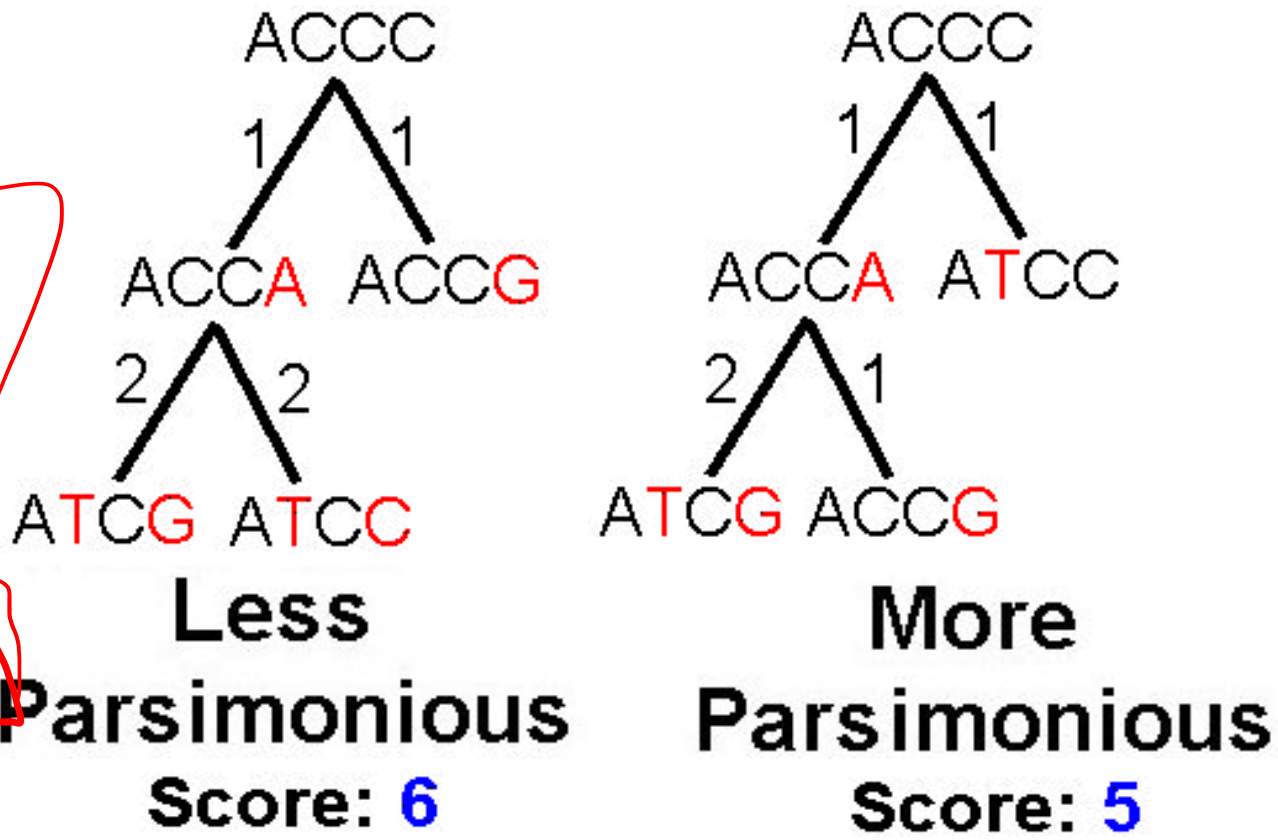

Key observations: (1) Characters can be solved independently.
(2) Optimal substructure in subtrees.

Recurrence

$L(T)$ set of leaves

$r(T)$ root of T $\quad$ $\delta(v)$ is set of children of v

T tree

$\sigma: L(T) \to \Sigma$ $\quad$ Σ states of character.

$\mu(v, s)$ "what is the min ~~cost~~ number of changes when assigning state s to vertex v"

what is ~~our solution?~~ the score of opt solution?

$$\min_{s \in \Sigma} \mu(r(T), s)$$

Base case:

$v \in L(T)$ $\quad$ $\mu(v,s) = \begin{cases} 0, & \text{if } s = \sigma(v), \\ \infty, & \text{if } s \neq \sigma(v). \end{cases}$

Step

Let v be an internal vertex with children $\delta(v)$

$$\mu(v,s) = \sum_{w \in \delta(v)} \min_{t \in \Sigma} \{ 1(s \neq t) + \mu(w,t) \}$$

$v \to s$

if $s \neq t$: $+1$

if $s = t$: 0

$w_1 \to t$ $\qquad$ w_2

$$\min_{t \in \Sigma} \{ \boxed{1(s \neq t)} + \mu(w_1, t) \}$$

$$\min_{t' \in \Sigma} \{ \boxed{1(s \neq t')} + \mu(w_2, t') \}$$

Recurrence for Small Maximum Parsimony Problem

Small Maximum Parsimony Phylogeny Problem:
Given rooted tree T whose leaves are labeled by $\sigma : L(T) \to \Sigma$, find assignment of states to each internal vertex of T with minimum parsimony score.

Let $\mu(v, s)$ be the minimum number of mutations in the subtree rooted at v when assigning state s to v.

Solution: $\min_{s \in \Sigma} \mu(r(T), s)$

Let $\delta(v)$ be the set of children of v.

$$1(s \neq t) = c(s,t) = \begin{cases} 0, & \text{if } s = t \\ 1, & \text{if } s \neq t, \end{cases}$$

$$\mu(v,s) = \min \begin{cases} \infty, & \text{if } v \in L(T) \text{ and } s \neq \sigma(v), \\ 0, & \text{if } v \in L(T) \text{ and } s = \sigma(v), \\ \sum_{w \in \delta(v)} \min_{t \in \Sigma} \{c(s,t) + \mu(w,t)\}, & \text{if } v \notin L(T). \end{cases}$$

base case

step

Example

$\Sigma = \{A, T\}$

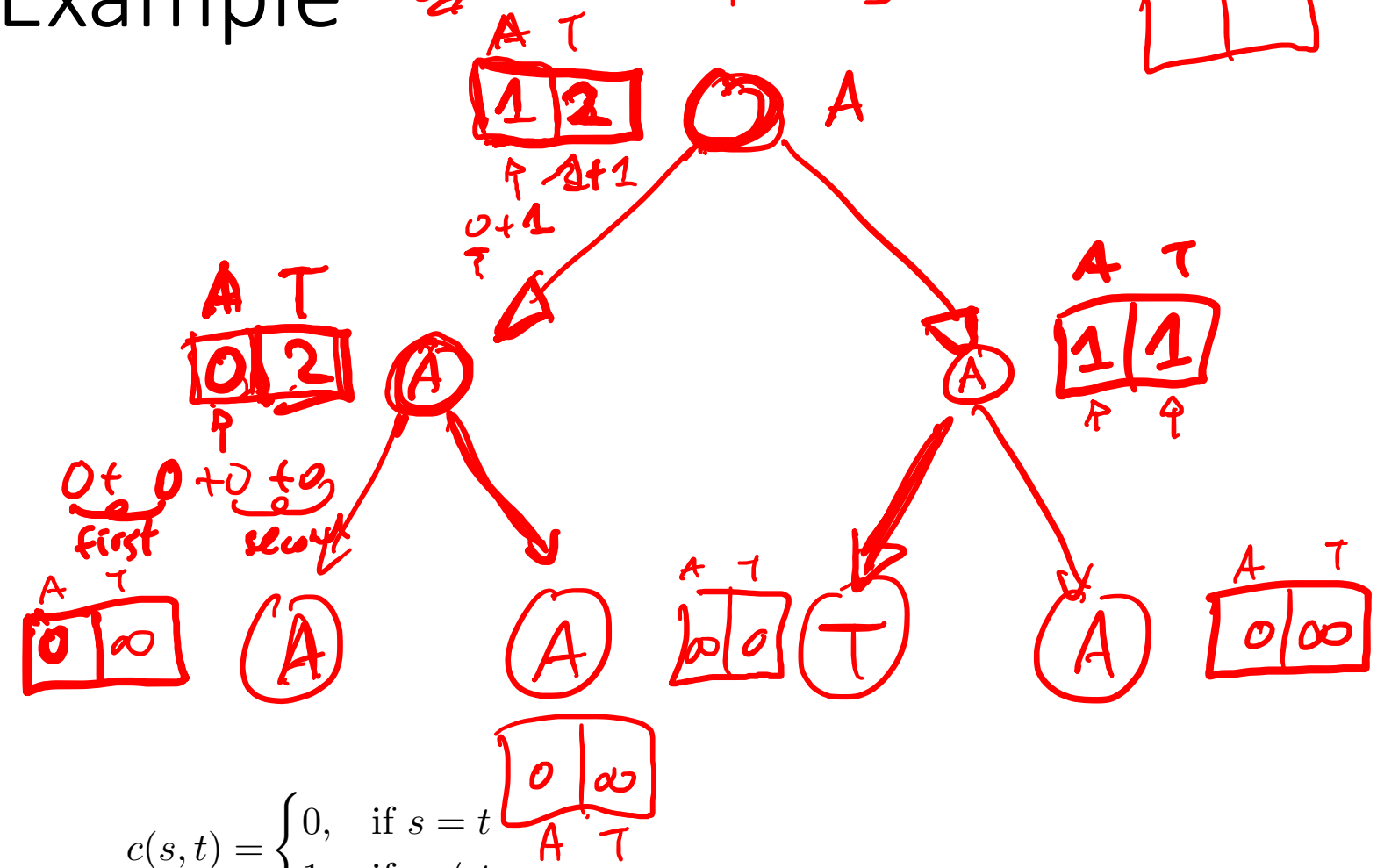

$$c(s,t) = \begin{cases} 0, & \text{if } s = t \\ 1, & \text{if } s \neq t, \end{cases}$$

$$\mu(v,s) = \min \begin{cases} \infty, & \text{if } v \in L(T) \text{ and } s \neq \sigma(v), \\ 0, & \text{if } v \in L(T) \text{ and } s = \sigma(v), \\ \sum_{w \in \delta(v)} \min_{t \in \Sigma} \{c(s,t) + \mu(w,t)\}, & \text{if } v \notin L(T). \end{cases}$$

Pseudocode for Filling and Traceback

HW3

Sankoff Algorithm (Sankoff 1975) dynamic programming

Small Maximum Parsimony Phylogeny Problem:
Given $m \times n$ matrix $A = [a_{i,j}]$ and tree T with m leaves, find assignment of character states to each internal vertex of T with minimum parsimony score.

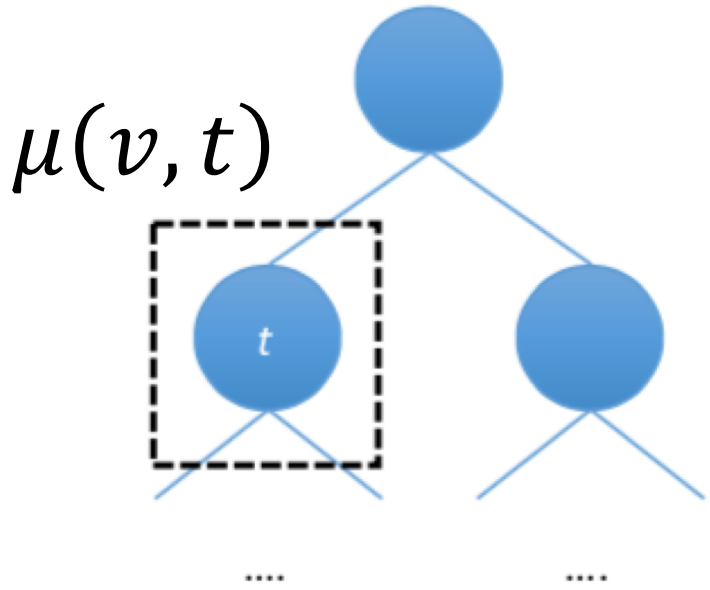

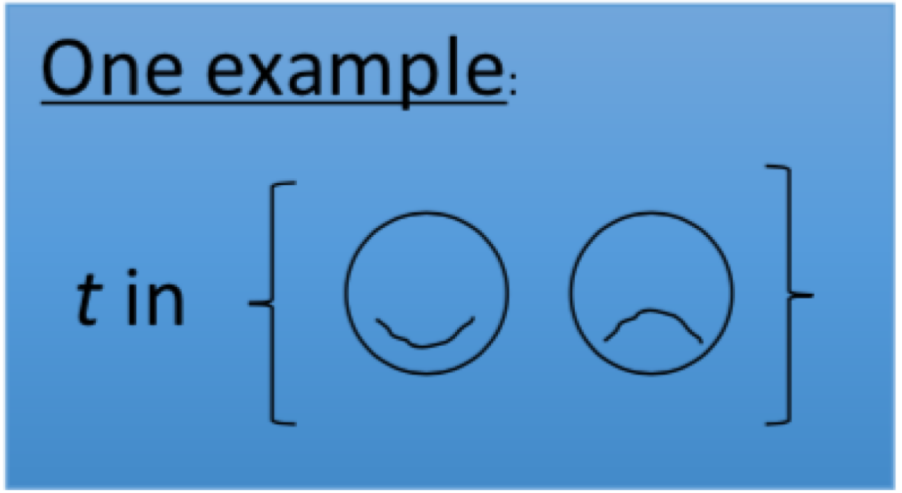

Outline

- Recap character-based phylogeny
- Application of small phylogeny maximum parsimony problem to cancer

Reading:

- Chapters 10.2, 10.5-10.8, 10.9 in Jones and Pevzner

Tumorigenesis: (i) Cell Mutation

Clonal Theory of Cancer
[Nowell, 1976]

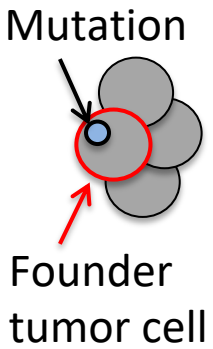

Tumorigenesis: (i) Cell Mutation, (ii) Cell Division

Clonal Theory of Cancer
[Nowell, 1976]

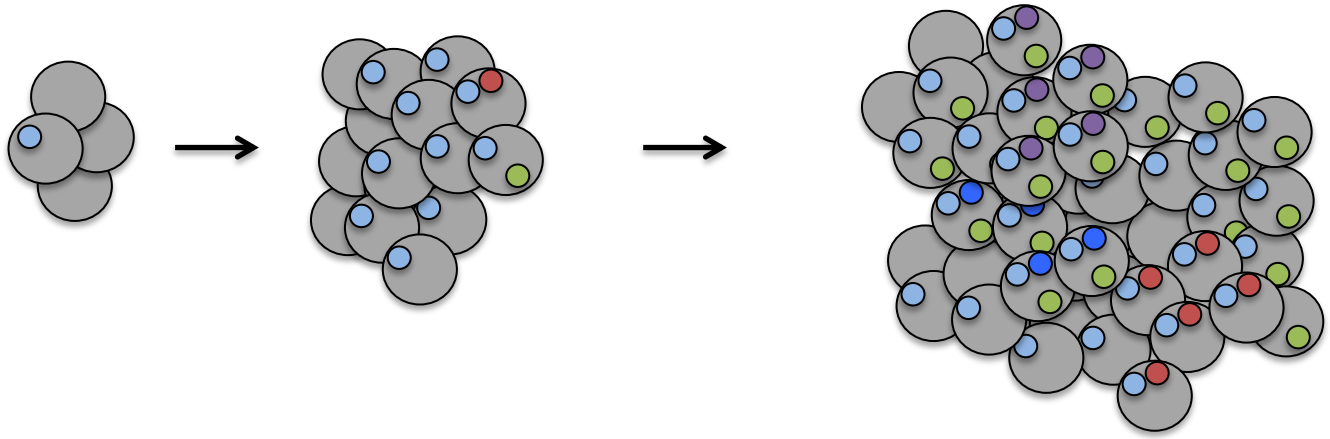

Heterogeneous Tumor

Tumorigenesis: (i) Cell Division, (ii) Mutation & (iii) Migration

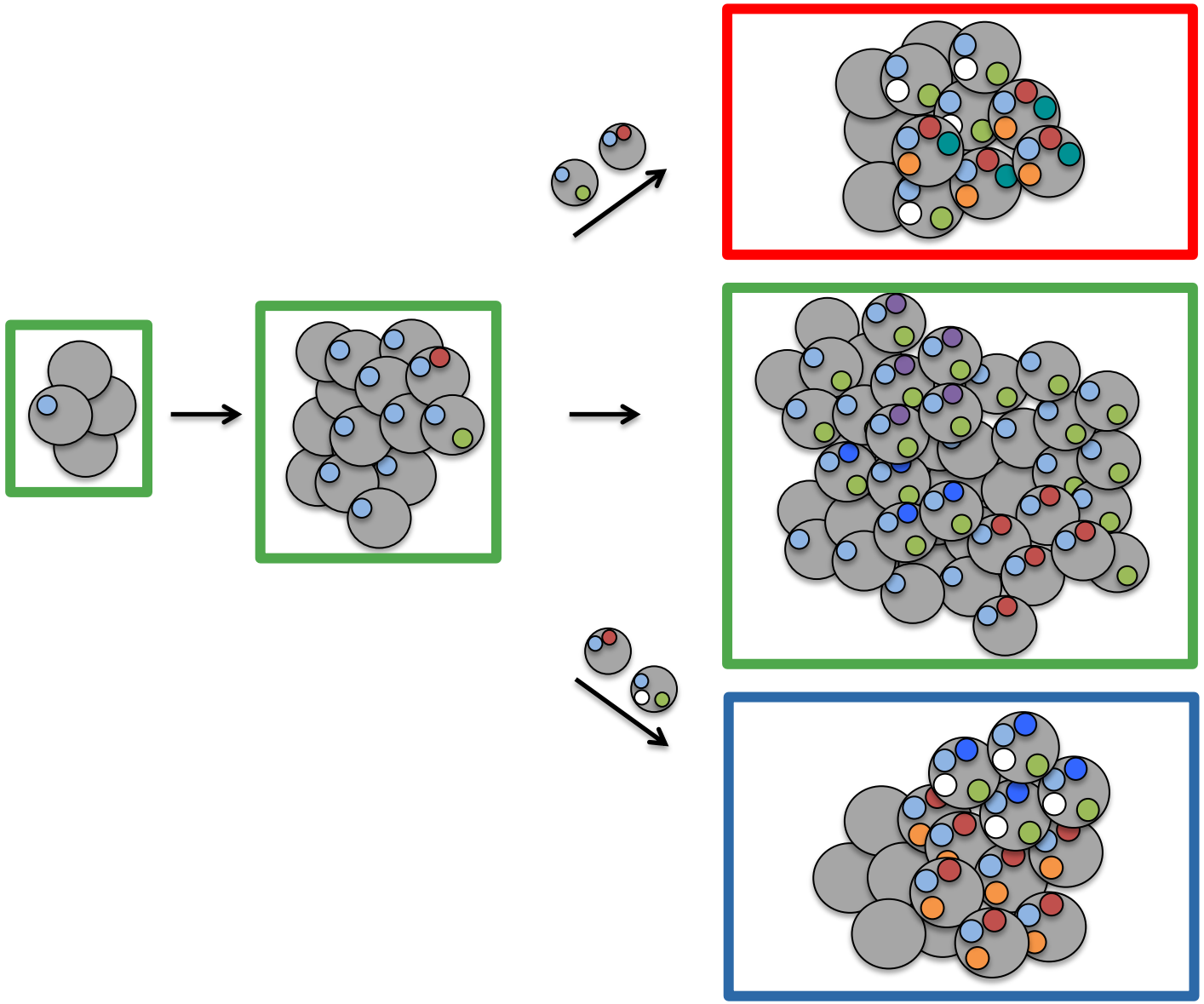

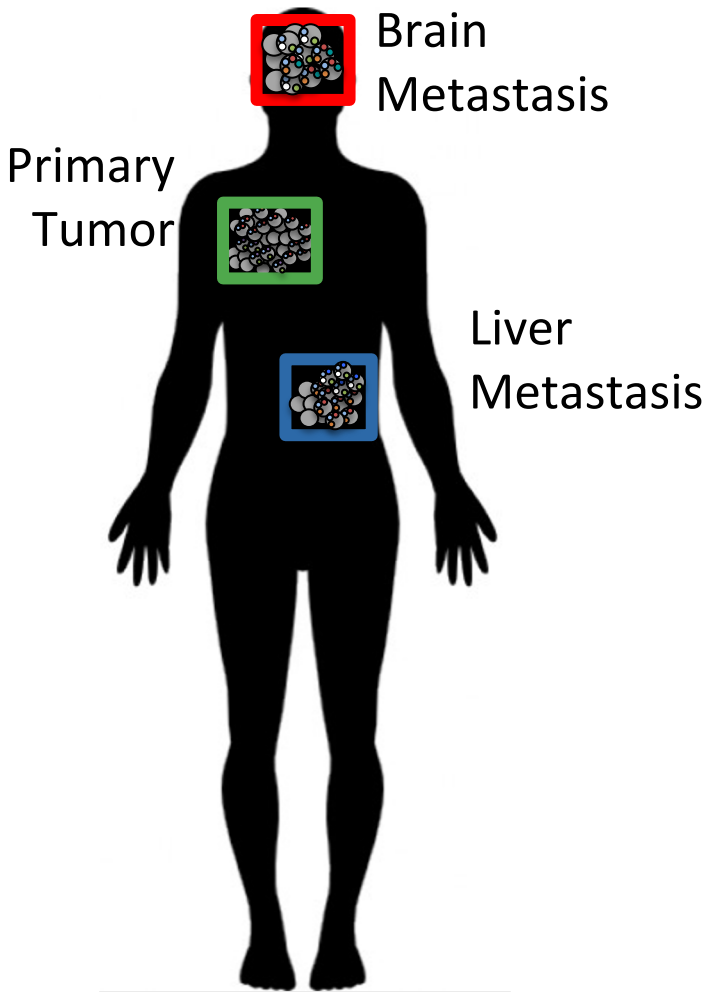

Tumorigenesis: (i) Cell Division, (ii) Mutation & (iii) Migration

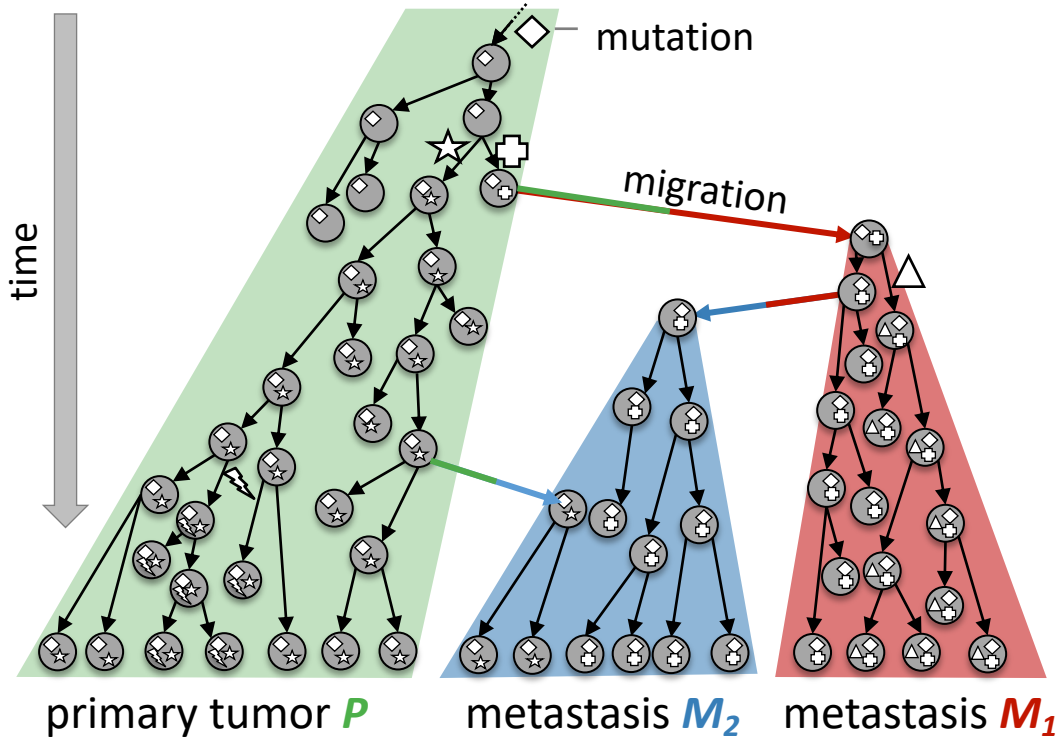

Cell Tree

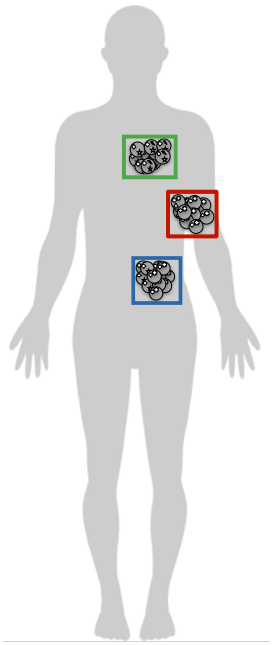

Tumorigenesis: (i) Cell Division, (ii) Mutation & (iii) Migration

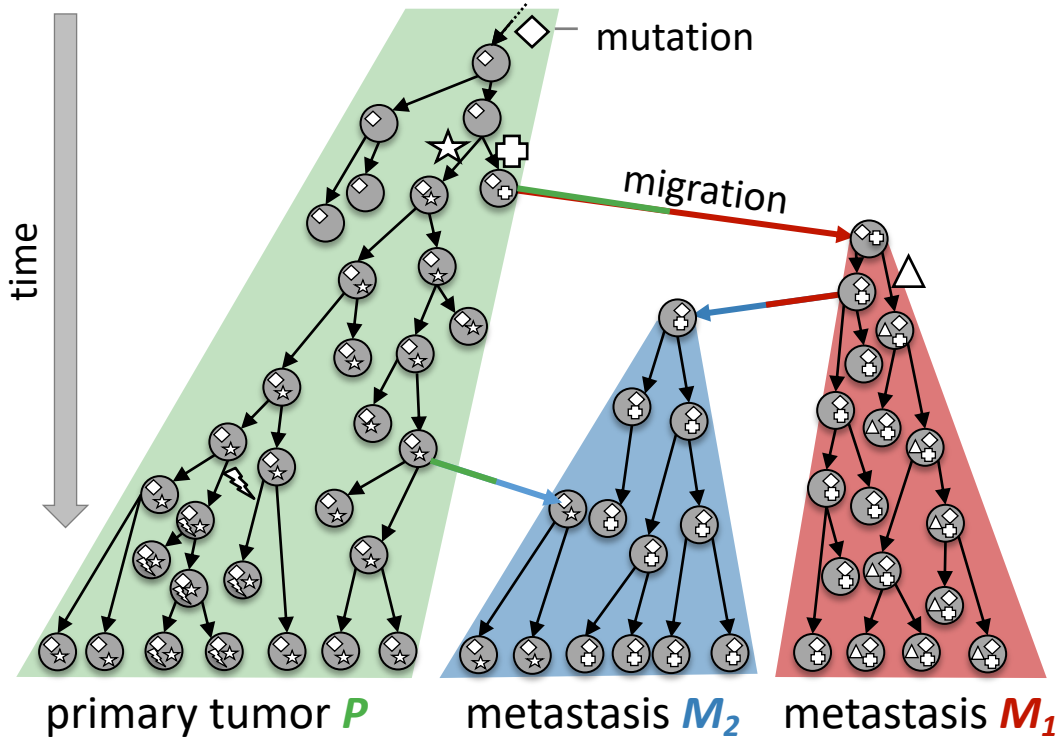

Cell Tree

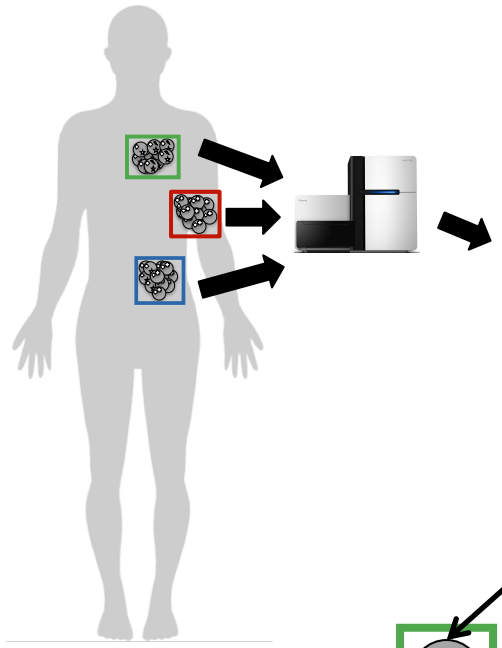

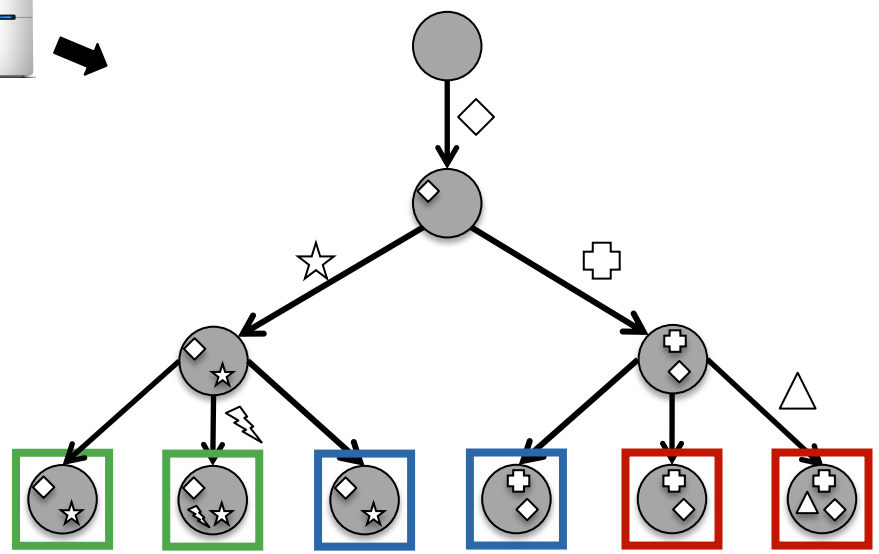

Phylogenetic Tree *T*

Tumorigenesis: (i) Cell Division, (ii) Mutation & (iii) Migration

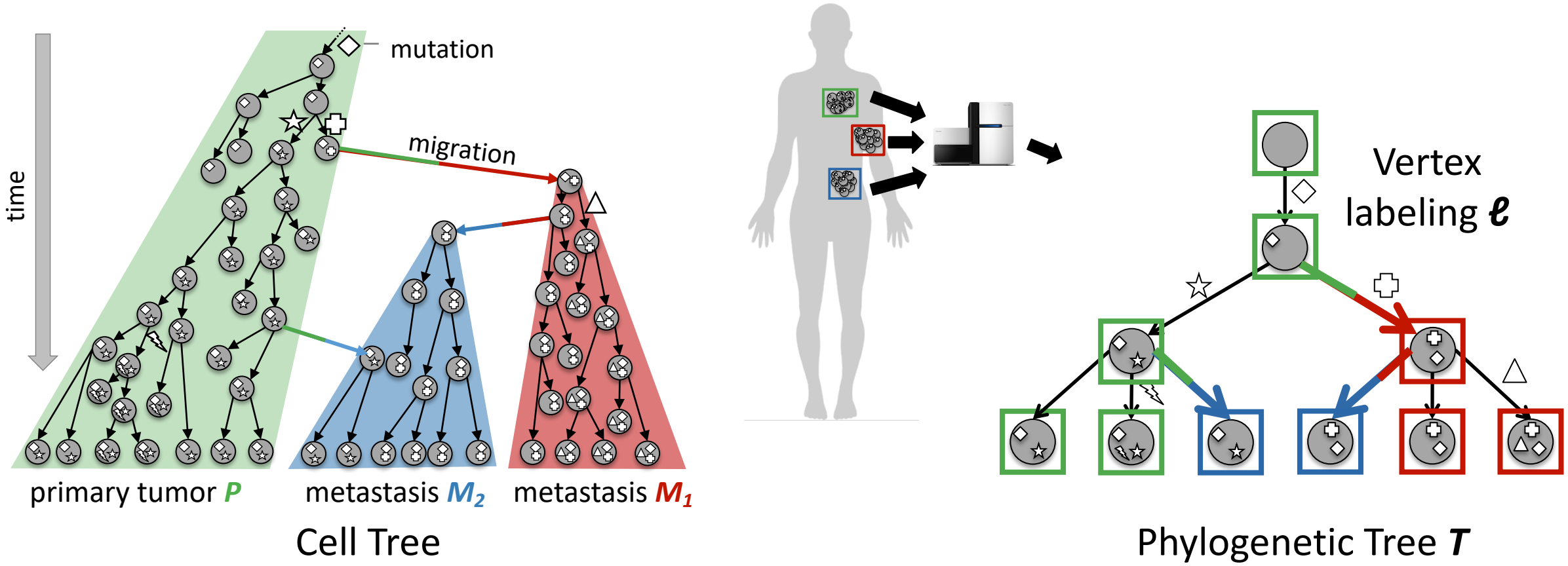

Goal: Given phylogenetic tree ***T***, find ***parsimonious*** vertex labeling ***ℓ*** with fewest migrations

Slatkin, M. and Maddison, W. P. (1989). A cladistic measure of gene flow inferred from the phylogenies of alleles. *Genetics*, *123*(3), 603–613.

Minimum Migration Analysis in Ovarian Cancer

McPherson et al. (2016). Divergent modes of clonal spread and intraperitoneal mixing in high-grade serous ovarian cancer. *Nature Genetics*.

- Instance of the maximum parsimony small phylogeny problem [Fitch, 1971; Sankoff, 1975]

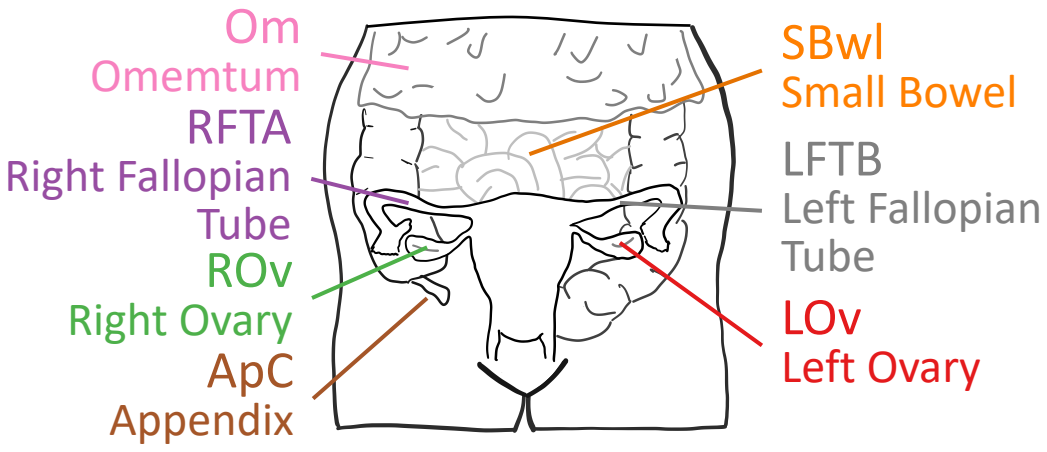

m = 7 anatomical sites

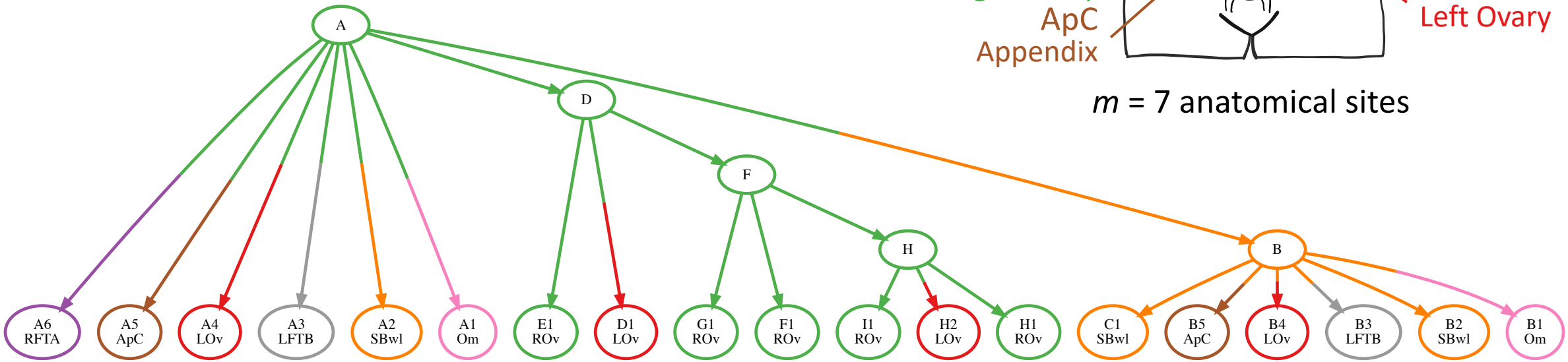

Minimum Migration Analysis in Ovarian Cancer

McPherson et al. (2016). Divergent modes of clonal spread and intraperitoneal mixing in high-grade serous ovarian cancer. *Nature Genetics*.

- Instance of the maximum parsimony small phylogeny problem [Fitch, 1971; Sankoff, 1975]

$\mu^* = 13$

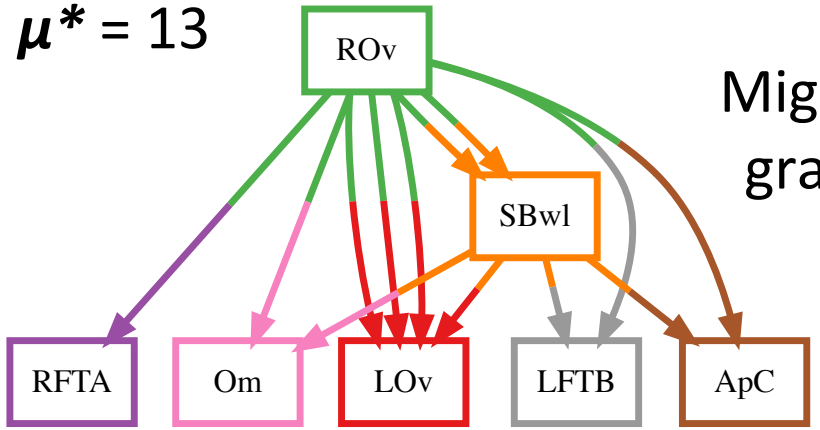

Migration graph **G**

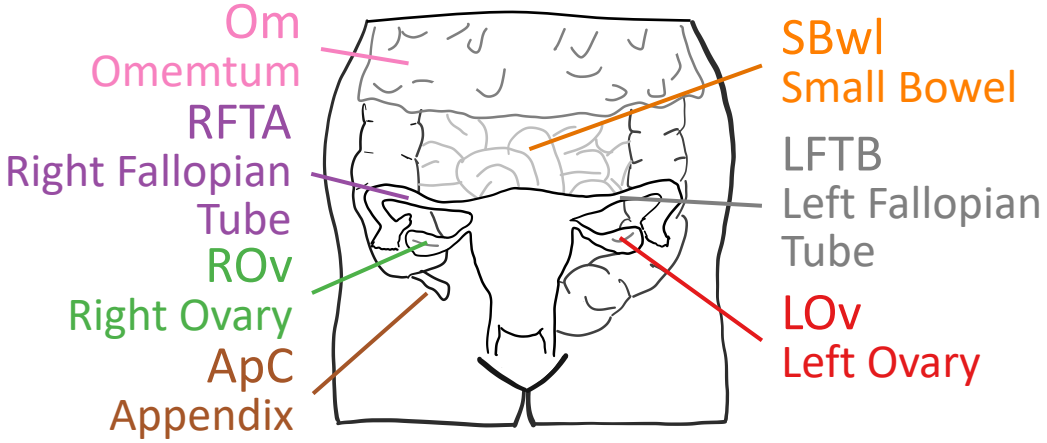

$m = 7$ anatomical sites

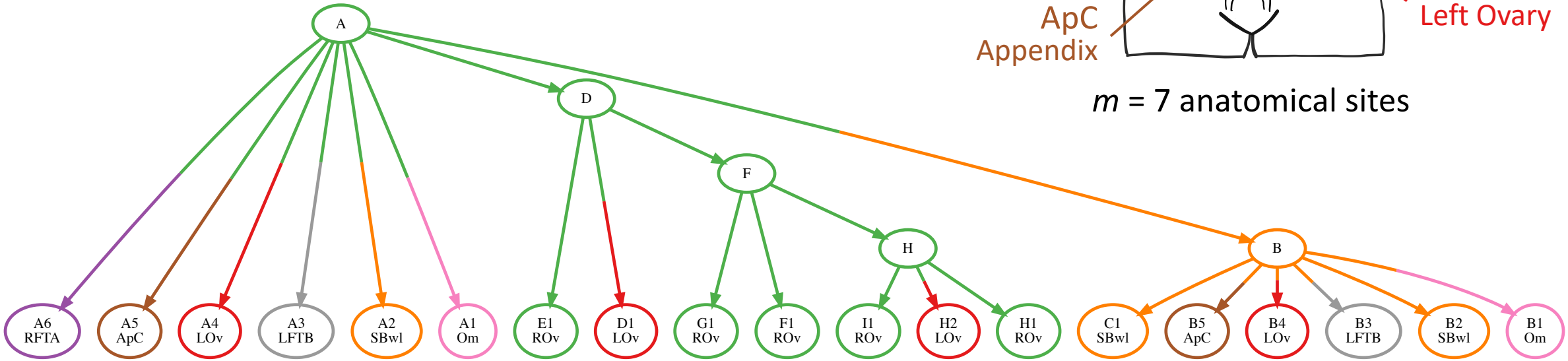

Minimum Migration History is *Not* Unique

- Enumerate all minimum-migration vertex labelings in the backtrace step

$\mu^* = 13$

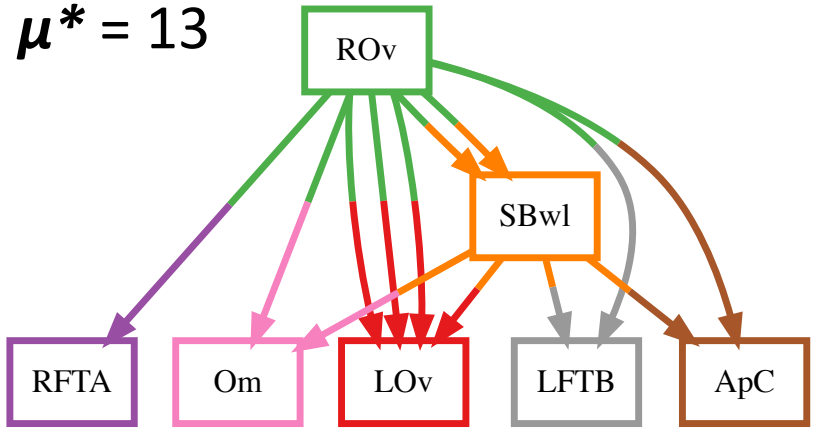

$\mu^* = 13$

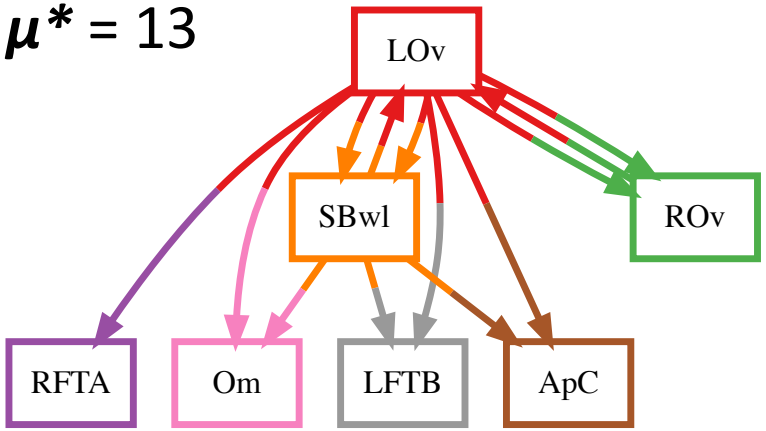

$\mu^* = 13$

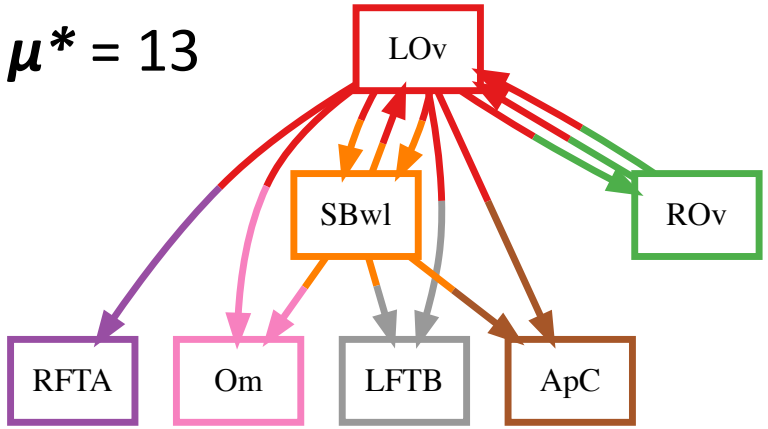

$\mu^* = 13$

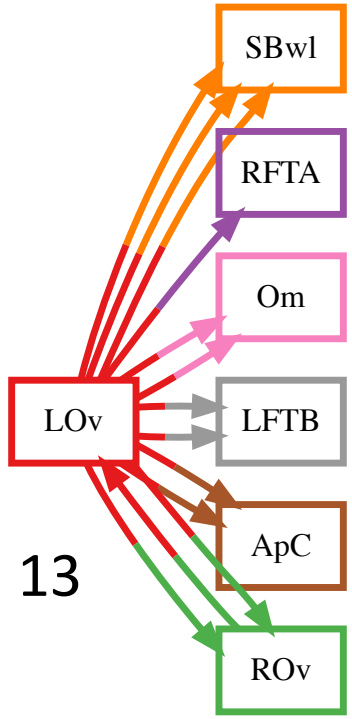

$\mu^* = 13$

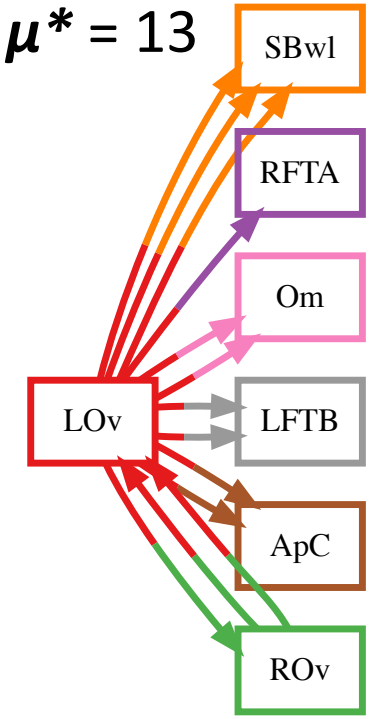

ApC	Appendix
LFTB	Left Fallopian Tube
LOv	Left Ovary
RFTA	Right Fallopian Tube
ROv	Right Ovary
SBwl	Small Bowel
Om	Omentum

Comigrations: Simultaneous Migrations of Multiple Clones

- Multiple tumor cells migrate simultaneously through the blood stream [Cheung et al., 2016]
- Second objective: number γ of comigrations is the number of multi-edges in migration graph G †

† Not necessarily true in the case of directed cycles

$\mu^* = 13$

$\gamma = 10$

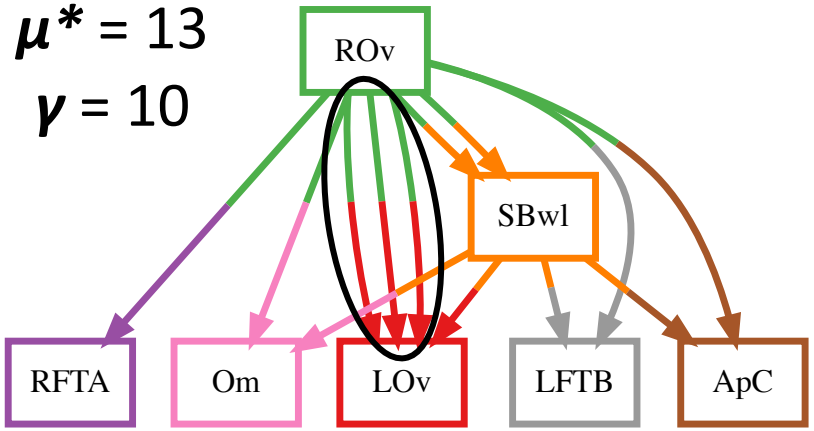

Migration Graph G

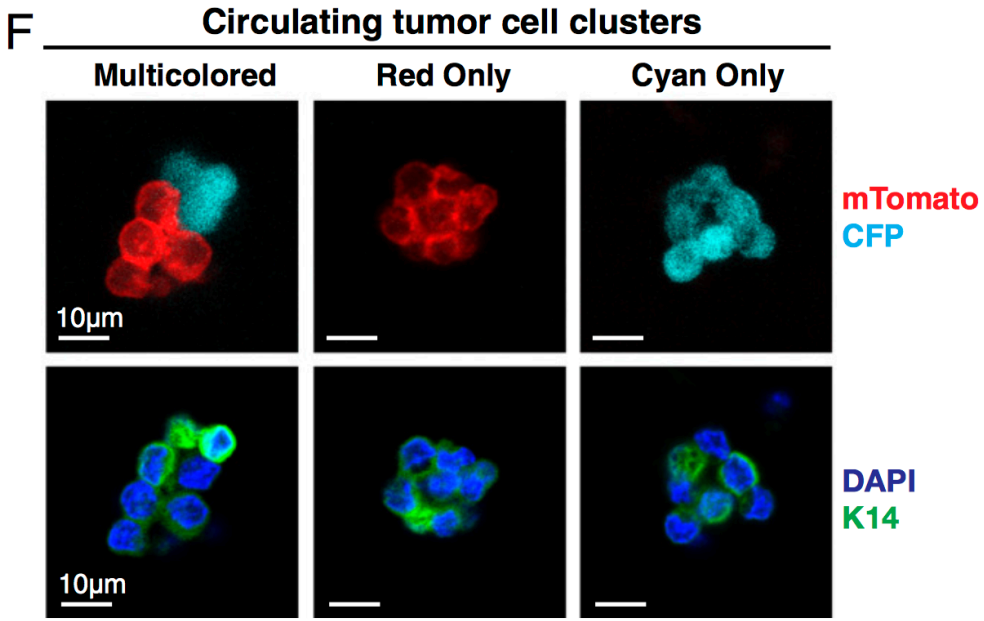

Clone Tree T

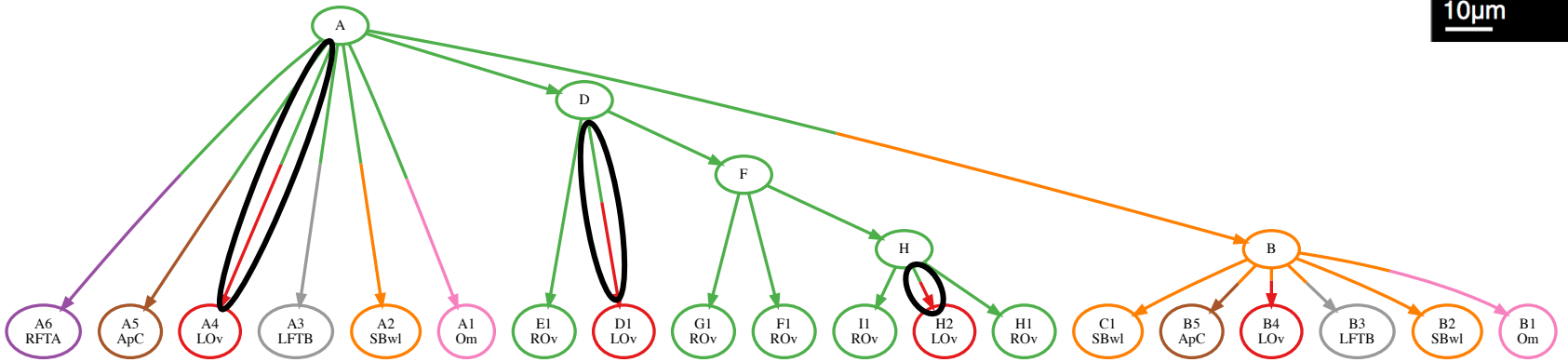

ApC	Appendix
LFTB	Left Fallopian Tube
LOv	Left Ovary
RFTA	Right Fallopian Tube
ROv	Right Ovary
SBwl	Small Bowel
Om	Omentum

Comigrations: Simultaneous Migrations of Multiple Clones

- Multiple tumor cells migrate simultaneously through the blood stream [Cheung et al., 2016]
- Second objective: number γ of comigrations is the number of multi-edges in migration graph G †

† Not necessarily true in the case of directed cycles

$\mu^* = 13$
$\gamma = 10$

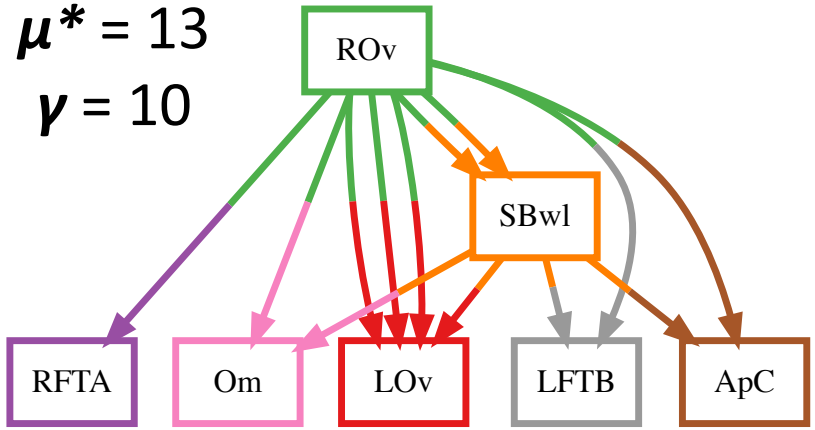

$\mu^* = 13$
$\gamma = 11$

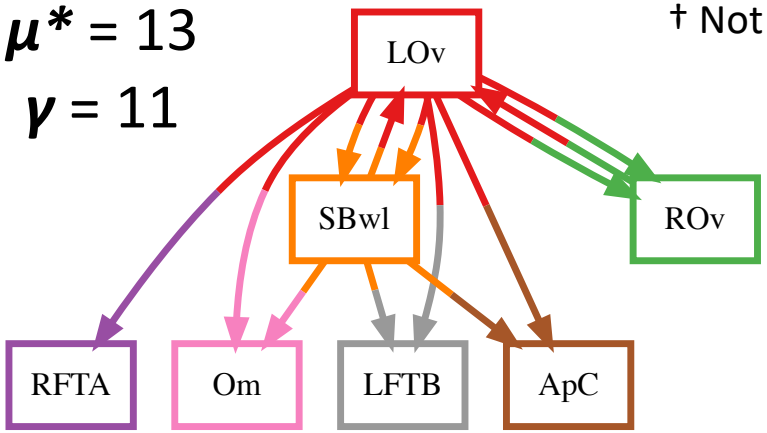

$\mu^* = 13$
$\gamma = 11$

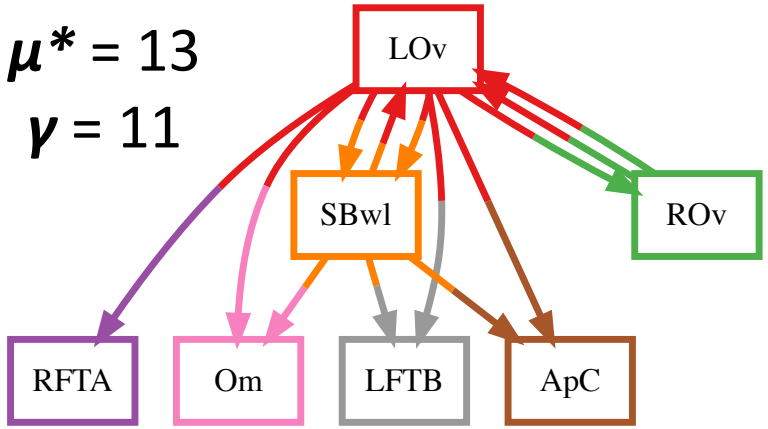

$\mu^* = 13$
$\gamma = 7$

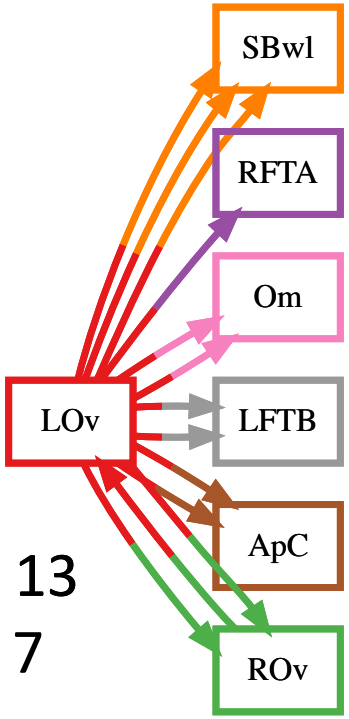

$\mu^* = 13$
$\gamma = 7$

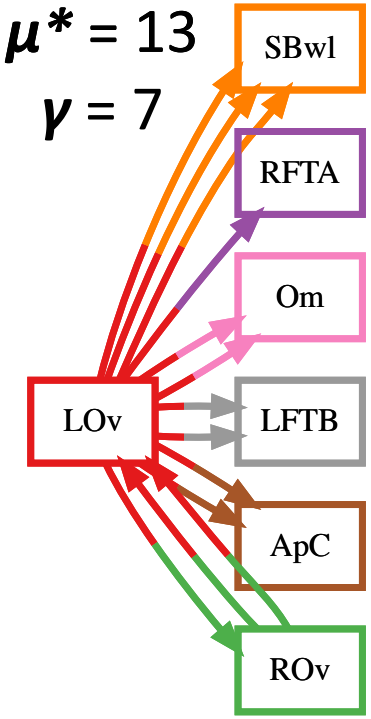

ApC	Appendix
LFTB	Left Fallopian Tube
LOv	Left Ovary
RFTA	Right Fallopian Tube
ROv	Right Ovary
SBwl	Small Bowel
Om	Omentum

Constrained Multi-objective Optimization Problem

Parsimonious Migration History (PMH): Given a phylogenetic tree T and a set $\mathcal{P} \subseteq \{\mathrm{S}, \mathrm{M}, \mathrm{R}\}$ of allowed migration patterns, find vertex labeling ℓ with minimum migration number $\mu^*(T)$ and smallest comigration number $\hat{\gamma}(T)$.

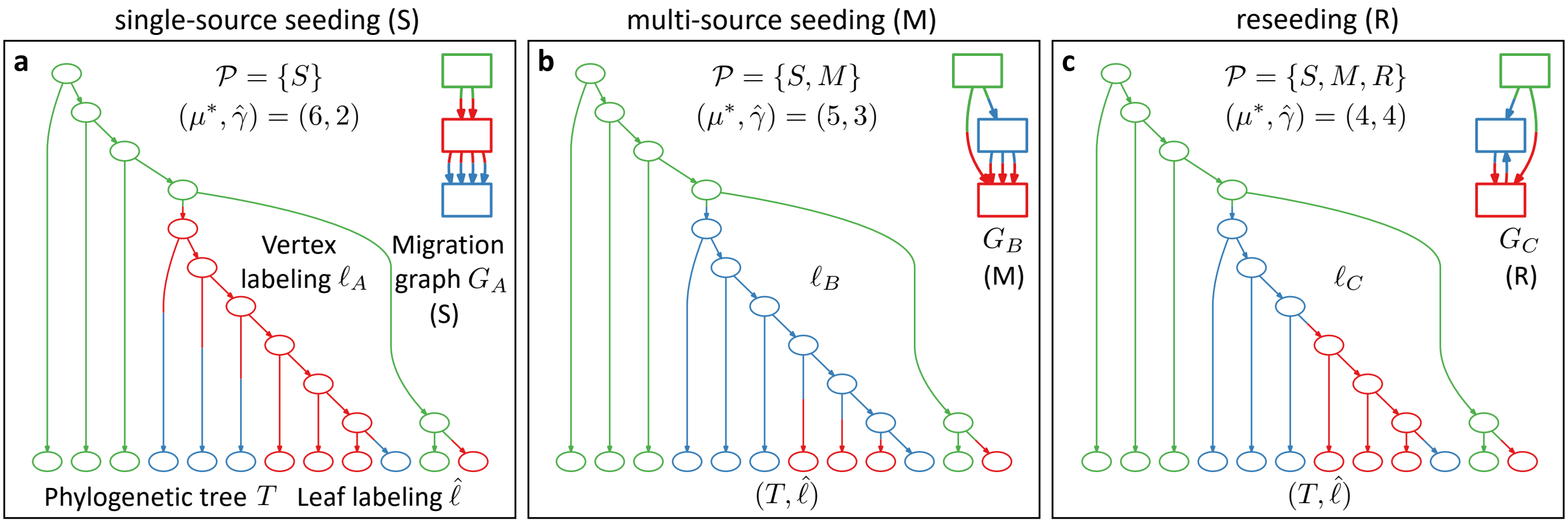

El-Kebir, M., Satas, G., & Raphael, B. J. (2018). Inferring parsimonious migration histories for metastatic cancers. *Nature Genetics*, *50*(5), 718–726.

Results [El-Kebir, WABI 2018]

Parsimonious Migration History (PMH): Given a phylogenetic tree T and a set $\mathcal{P} \subseteq \{\mathrm{S}, \mathrm{M}, \mathrm{R}\}$ of allowed migration patterns, find vertex labeling ℓ with minimum migration number $\mu^*(T)$ and smallest comigration number $\hat{\gamma}(T)$.

single-source seeding (S)

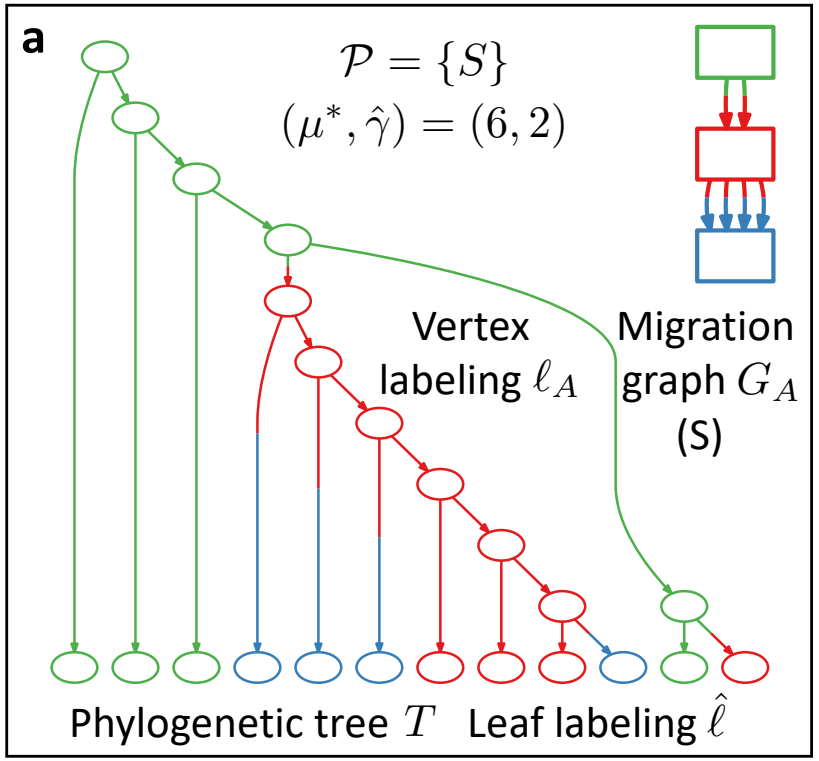

Theorem 1: PMH is NP-hard when $\mathcal{P} = \{\mathrm{S}\}$

Theorem 2: PMH is fixed parameter tractable in the number m of locations when $\mathcal{P} = \{\mathrm{S}\}$

PMH is NP-hard when $\mathcal{P} = \{S\}$

3-SAT: Given $\varphi = \bigwedge_{i=1}^{k}(y_{i,1} \vee y_{i,2} \vee y_{i,3})$ with variables $\{x_1, \dots, x_n\}$ and k clauses, find $\phi : [n] \to \{0,1\}$ satisfying φ

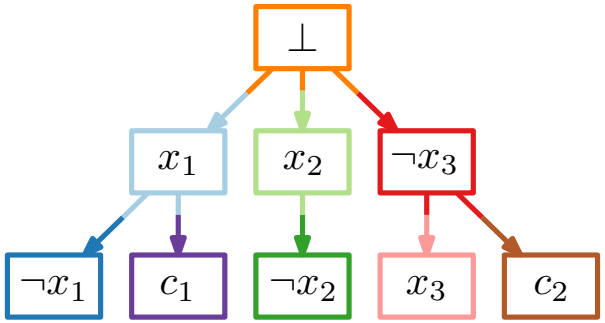

$\Sigma = \{x_1, \dots, x_n, \neg x_1, \dots, \neg x_n, c_1, \dots c_k, \perp\}$

PMH is NP-hard when $\mathcal{P} = \{S\}$

3-SAT: Given $\varphi = \bigwedge_{i=1}^{k}(y_{i,1} \vee y_{i,2} \vee y_{i,3})$ with variables $\{x_1, \dots, x_n\}$ and k clauses, find $\phi : [n] \to \{0,1\}$ satisfying φ

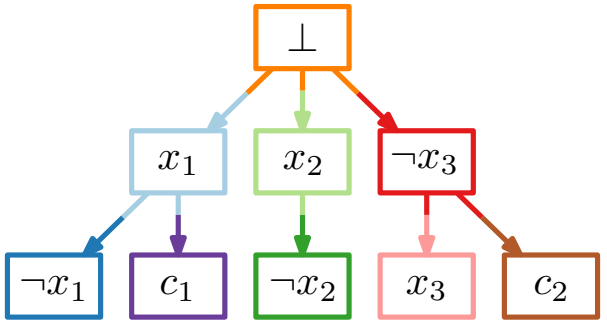

$$\Sigma = \{x_1, \dots, x_n, \neg x_1, \dots, \neg x_n, c_1, \dots c_k, \perp\}$$

Three ideas:

1. Ensure that $(x, \neg x) \in E(G)$ or $(\neg x, x) \in E(G)$
2. Ensure that $\ell^*\big(r(T)\big) = \perp$
3. Ensure that φ is satisfiable if and only if ℓ^* encodes a satisfying truth assignment

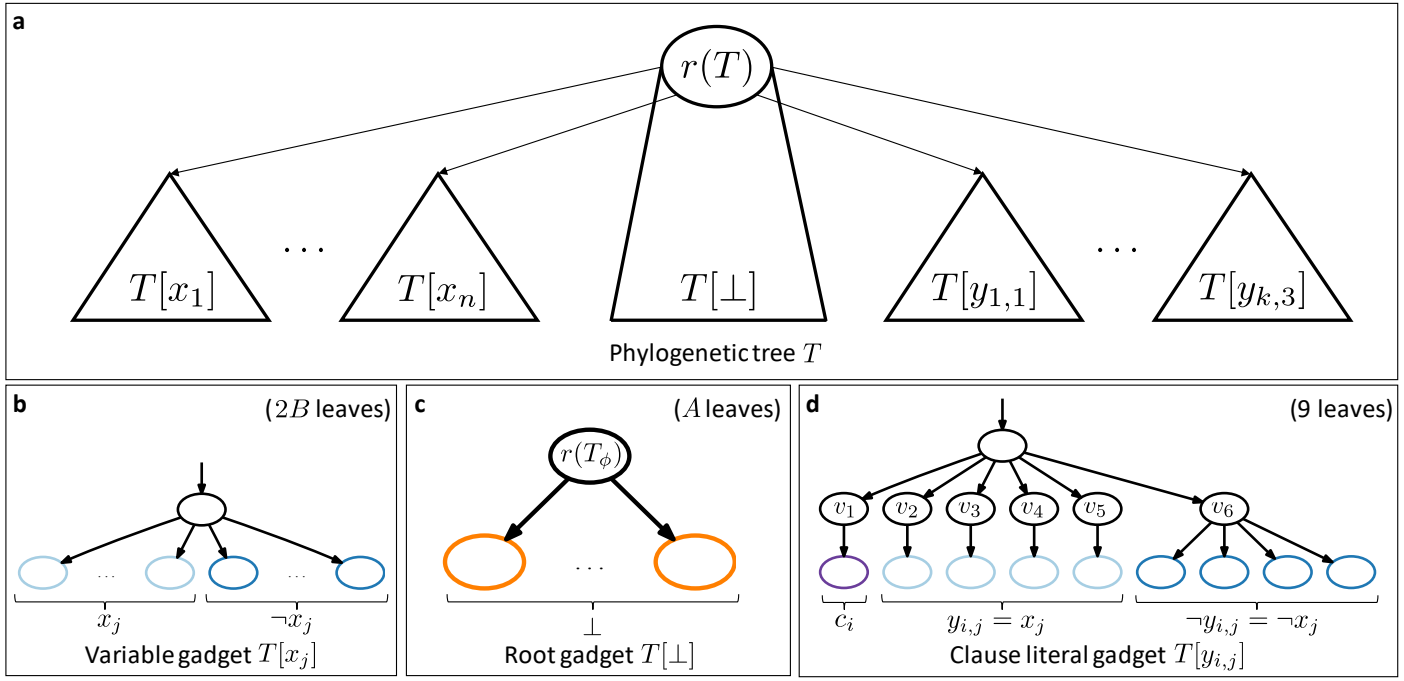

PMH is NP-hard when $\mathcal{P} = \{S\}$

3-SAT: Given $\varphi = \wedge_{i=1}^{k}(y_{i,1} \vee y_{i,2} \vee y_{i,3})$ with variables $\{x_1, \dots, x_n\}$ and k clauses, find $\phi : [n] \to \{0,1\}$ satisfying φ

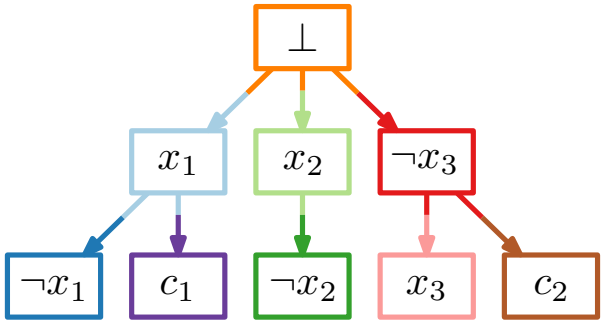

$$\Sigma = \{x_1, \dots, x_n, \neg x_1, \dots, \neg x_n, c_1, \dots c_k, \perp\}$$

Three ideas:

1. Ensure that $(x, \neg x) \in E(G)$ or $(\neg x, x) \in E(G)$
2. Ensure that $\ell^*\big(r(T)\big) = \perp$
3. Ensure that φ is satisfiable if and only if ℓ^* encodes a satisfying truth assignment

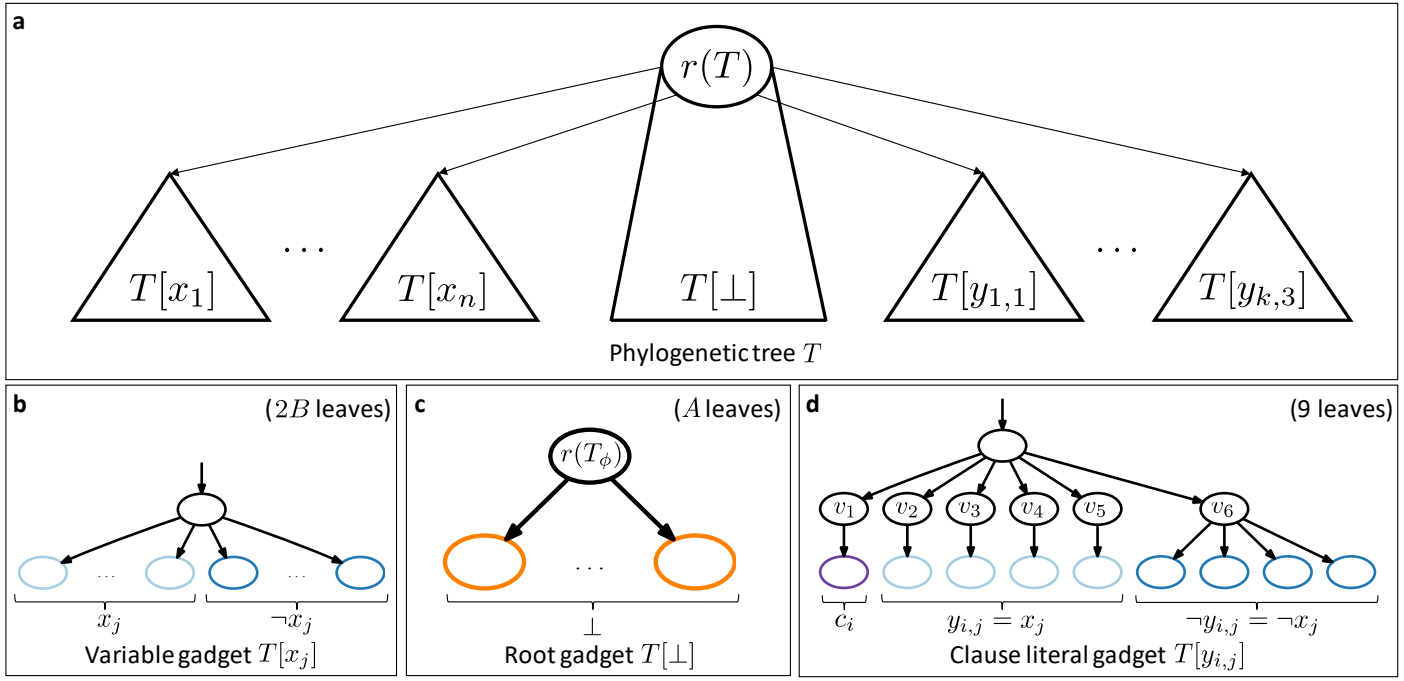

Lemma: Let $B > 10k + 1$ and $A > 2Bn + 27k$.
Then, φ is satisfiable if and only if $\mu^*(T) = (B+1)n + 25k$

PMH is NP-hard when $\mathcal{P} = \{S\}$

$$\mu^*(T) = (B+1)n + 25k$$
$$= 23 * 3 + 50 * 2 = 119$$

$$\varphi = (x_1 \vee x_2 \vee \neg x_3) \wedge (\neg x_1, \neg x_2, \neg x_3)$$

$$k = 2, n = 3$$
$$B = 10k + 2 = 22$$
$$A = 2Bn + 27\mathrm{k} + 1 = 187$$

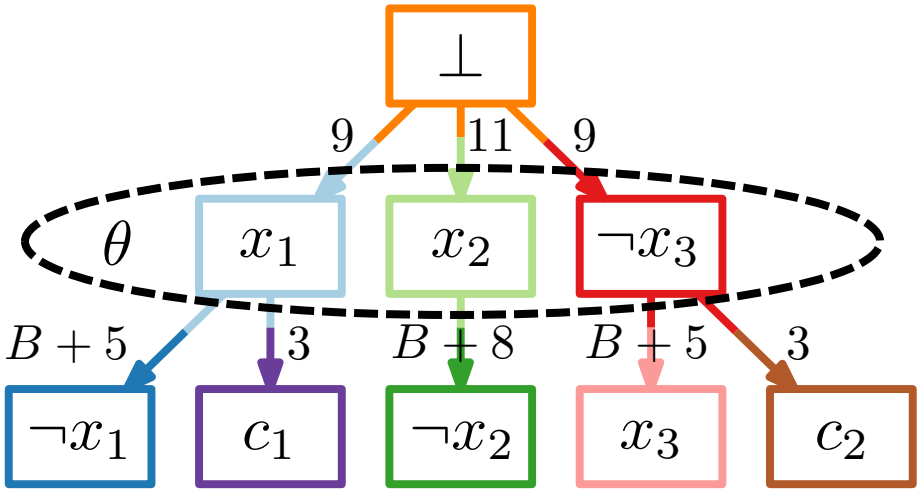

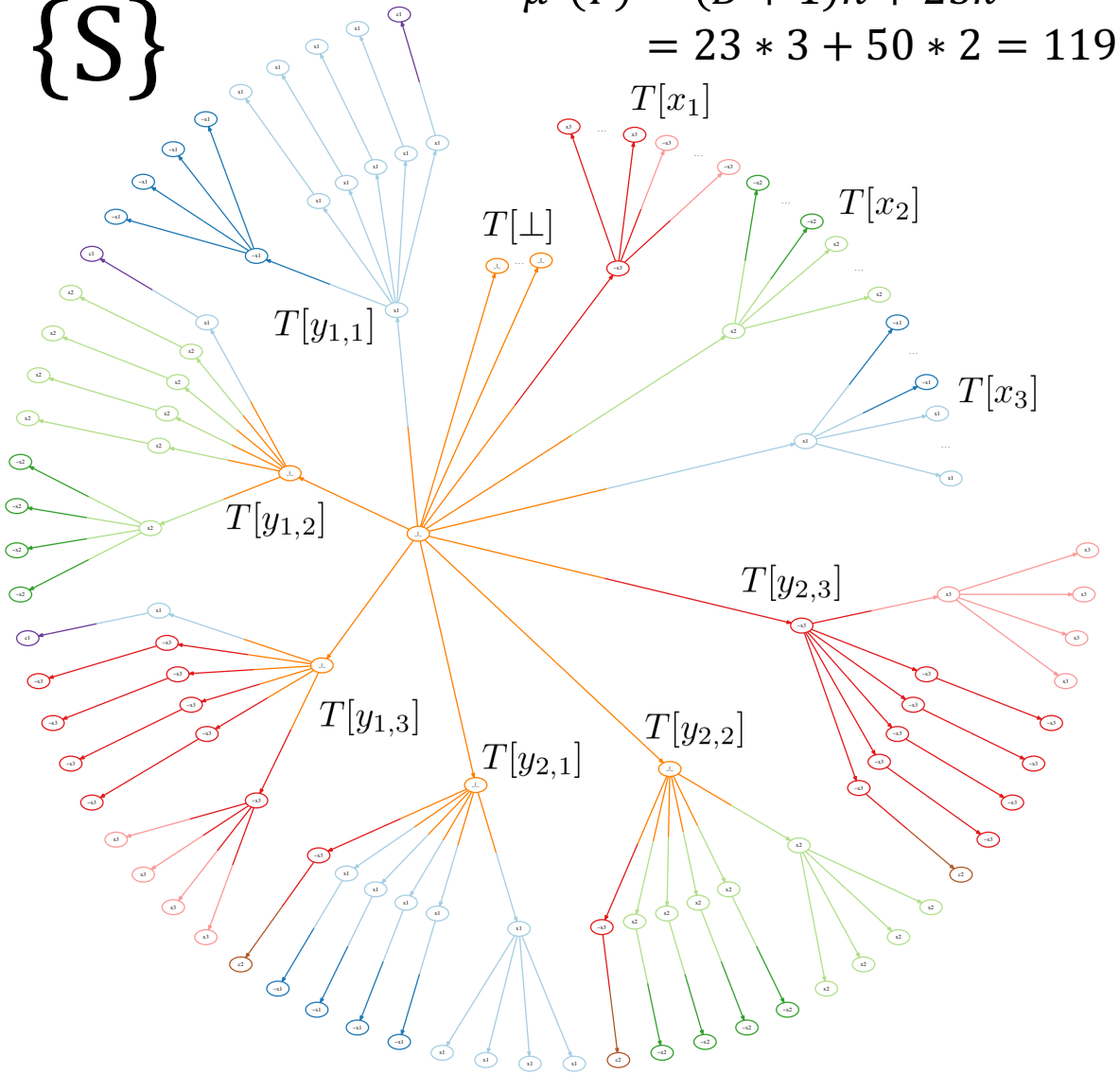

$$\Sigma = \{x_1, x_2, x_3, \neg x_1, \neg x_2, \neg x_3, c_1, c_2, \bot\}$$

Lemma: Let $B > 10k + 1$ and $A > 2Bn + 27k$.
Then, φ is satisfiable if and only if $\mu^*(T) = (B+1)n + 25k$

PMH is FPT in number m of locations when $\mathcal{P} = \{S\}$

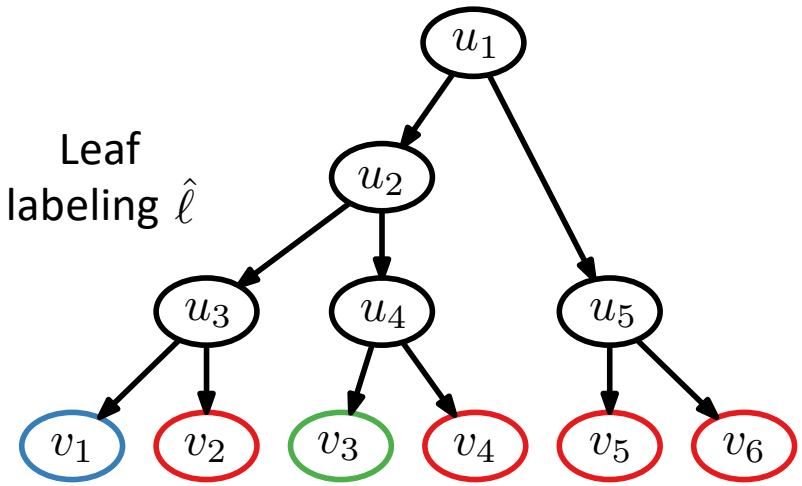

Phylogenetic tree T

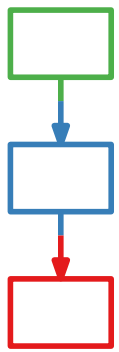

Migration tree $\hat{G}$

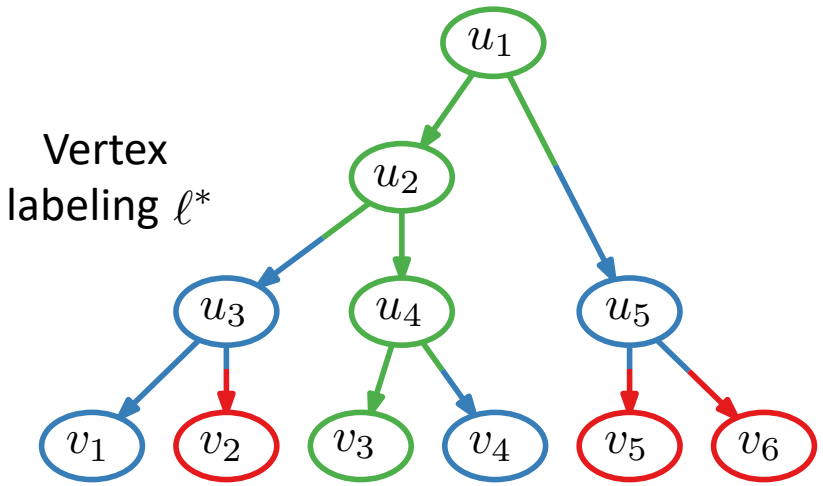

Phylogenetic tree T

Lemma: If there exists labeling ℓ consistent with $\hat{G}$ then

$$d_T(u,v) \geq d_{\hat{G}}(\mathrm{lca}_{\hat{G}}(u), \hat{\ell}(v)) \qquad \forall u, v \in V(T) \text{ such that } u \preceq_T v. \quad (1)$$

$$\ell^*(v) = \begin{cases} \mathrm{LCA}_{\hat{G}}(r(T)), & \text{if } v = r(T), \\ \sigma(\ell^*(\pi(v)), \mathrm{LCA}_{\hat{G}}(v)), & \text{if } v \neq r(T), \end{cases}$$

where $\sigma(s,t) = s$ if $s = t$ and otherwise $\sigma(s,t)$ is the unique child of s that lies on the path from s to t in $\hat{G}$.

Lemma: If (1) holds then ℓ^* is a minimum migration labeling consistent with $\hat{G}$.

PMH is FPT in number m of locations when $\mathcal{P} = \{S\}$

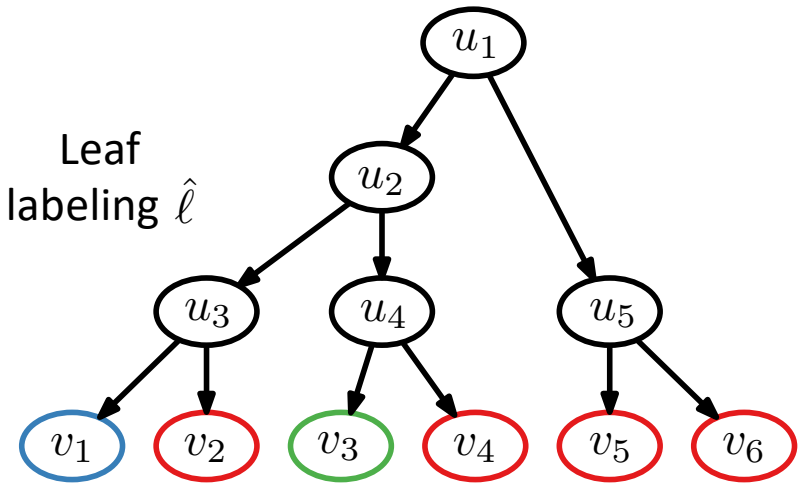

Phylogenetic tree T

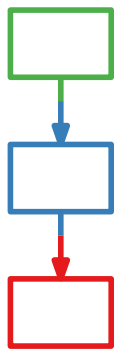

Migration tree $\hat{G}$

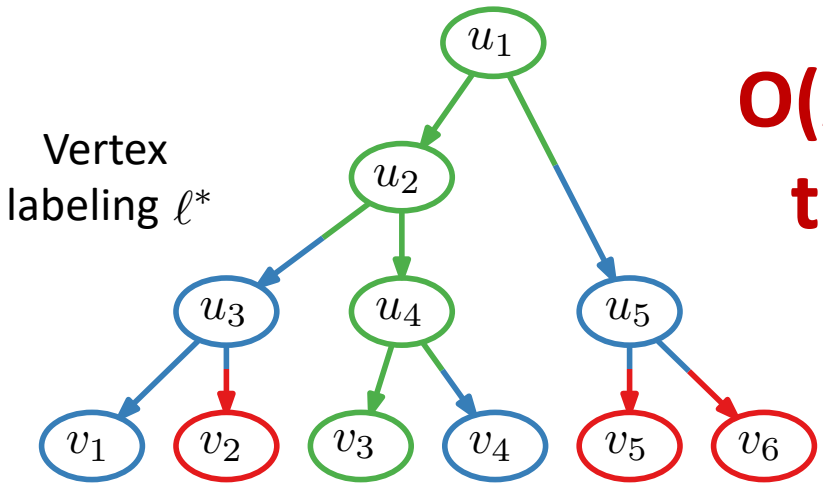

Phylogenetic tree T

$O(nm^m)$ time

Lemma: If there exists labeling ℓ consistent with $\hat{G}$ then

$$d_T(u,v) \geq d_{\hat{G}}(\mathrm{lca}_{\hat{G}}(u), \hat{\ell}(v)) \qquad \forall u, v \in V(T) \text{ such that } u \preceq_T v. \quad (1)$$

$$\ell^*(v) = \begin{cases} \mathrm{LCA}_{\hat{G}}(r(T)), & \text{if } v = r(T), \\ \sigma(\ell^*(\pi(v)), \mathrm{LCA}_{\hat{G}}(v)), & \text{if } v \neq r(T), \end{cases}$$

where $\sigma(s,t) = s$ if $s = t$ and otherwise $\sigma(s,t)$ is the unique child of s that lies on the path from s to t in $\hat{G}$.

Lemma: If (1) holds then ℓ^* is a minimum migration labeling consistent with $\hat{G}$.

Simulations

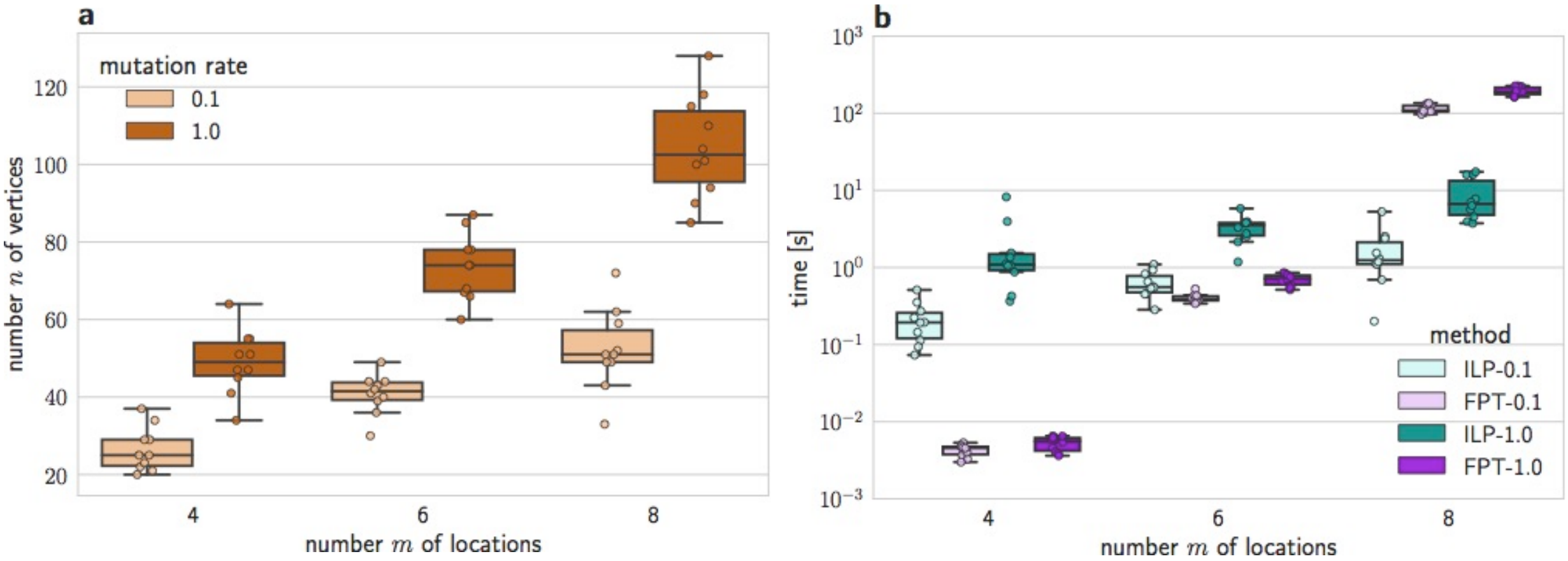

Available on: https://github.com/elkebir-group/PMH-S